THE INFORMATION DISCLOSED ON THIS DRAWING IS PROPRIETARY. IT IS ISSUED FOR ENGINEERING USE ONLY AND MAY NOT BE REPRODUCED OR DISCLOSED, IN WHOLE OR IN PART, TO ANYONE WITHOUT THE DIRECT WRITTEN PERMISSION OF KRYSTAL ENTERPRISES, INC
PARTS OR TOOLS MANUFACTURED TO MEET THE REQUIREMENTS OF THIS DRAWING MAY NOT BE USED BY OR SOLD TO ANYONE WITHOUT THE DIRECT WRITTEN PERMISSION OF KRYSTAL ENTERPRISES.

REVISIONS

REV	DESCRIPTION	DATE	APPD

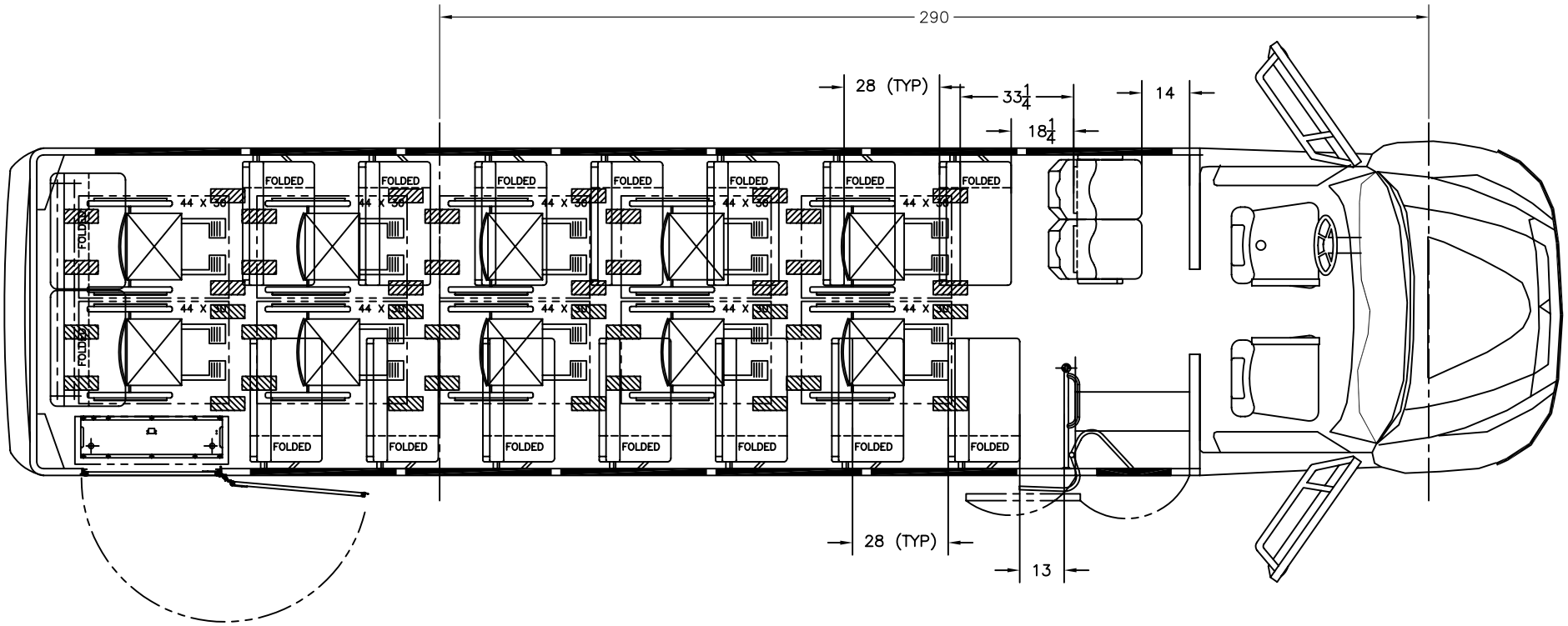

NOTE: SALES PROPOSAL

-4	-3	-2	-1	ITEM NO.	DWG SIZE	PART NO.	DESCRIPTION	NOTES
QTY PER DASH NO. ASSY								

LIST OF MATERIALS

UNLESS OTHERWISE SPECIFIED
DO NOT SCALE THIS DRAWING. ALL DIMENSIONS ARE IN INCHES.
ALL DIAMETERS TO BE CONCENTRIC TO COMMON CENTER LINE WITHIN .005 TIR.
CYLINDRICAL SURFACES AND FACES TO BE SQUARE WITHIN .005 PER INCH.
THREADS PER ASA AND SAE STANDARDS.
BREAK ALL SHARP EDGES .005/.015 R OR .005/.015 X 45°±5° CHAMFER.

HOLE DIA	TOL-.002	HOLE DIA	TOL-.002	HOLE DIA	TOL-.002
.013-.125	+.003	.251-.500	+.005	.751-1.000	+.009
.126-.250	+.004	.501-.750	+.007	1.001-2.000	+.011

TOLERANCES ON: DECIMALS .XXX=±.010 .XX=±.03 | FRACTIONS ±1/64 | ANGLES ±1° | SURFACE FINISH 63

NEXT ASSEMBLY

MATERIAL:

FINISH:

DR D. REVILLA	01/12/07	DESIGN	
CHK L. MAGANA	01/12/07	APPD	

KRYSTAL ENTERPRISES
2701 E. IMPERIAL HIGHWAY
BREA, CA 92821

MODEL 38, 34+2 PASS, SHUTTLE BUS

SIZE D | DWG NO. 26-C1098 | REV

SCALE: 1/20 | SHEET 1 OF 1